PROPRIETARY INFORMATION

THIS ENTIRE DOCUMENT AND ALL INFORMATION HEREON ARE PROPRIETARY AND THE EXCLUSIVE PROPERTY OF YANKEE HILL MACHINE COMPANY, NORTHAMPTON, MA, U.S.A. AND SHALL NOT BE REPRODUCED, DUPLICATED, OR COPIED IN WHOLE OR IN PART, OR OTHERWISE DISCLOSED OR MADE AVAILABLE TO ANY OTHER PERSON, FIRM, OR CORPORATION OR OTHERWISE USED WITHOUT THE PRIOR WRITTEN PERMISSION OF THE OWNER. THIS DRAWING OR PRINT MUST BE RETURNED TO THE OWNER UPON COMPLETION OF THE PURPOSE FOR WHICH IT WAS RELEASED BY YANKEE HILL MACHINE COMPANY, NORTHAMPTON, MA, U.S.A. OR EARLIER UPON DEMAND OF THE OWNER.

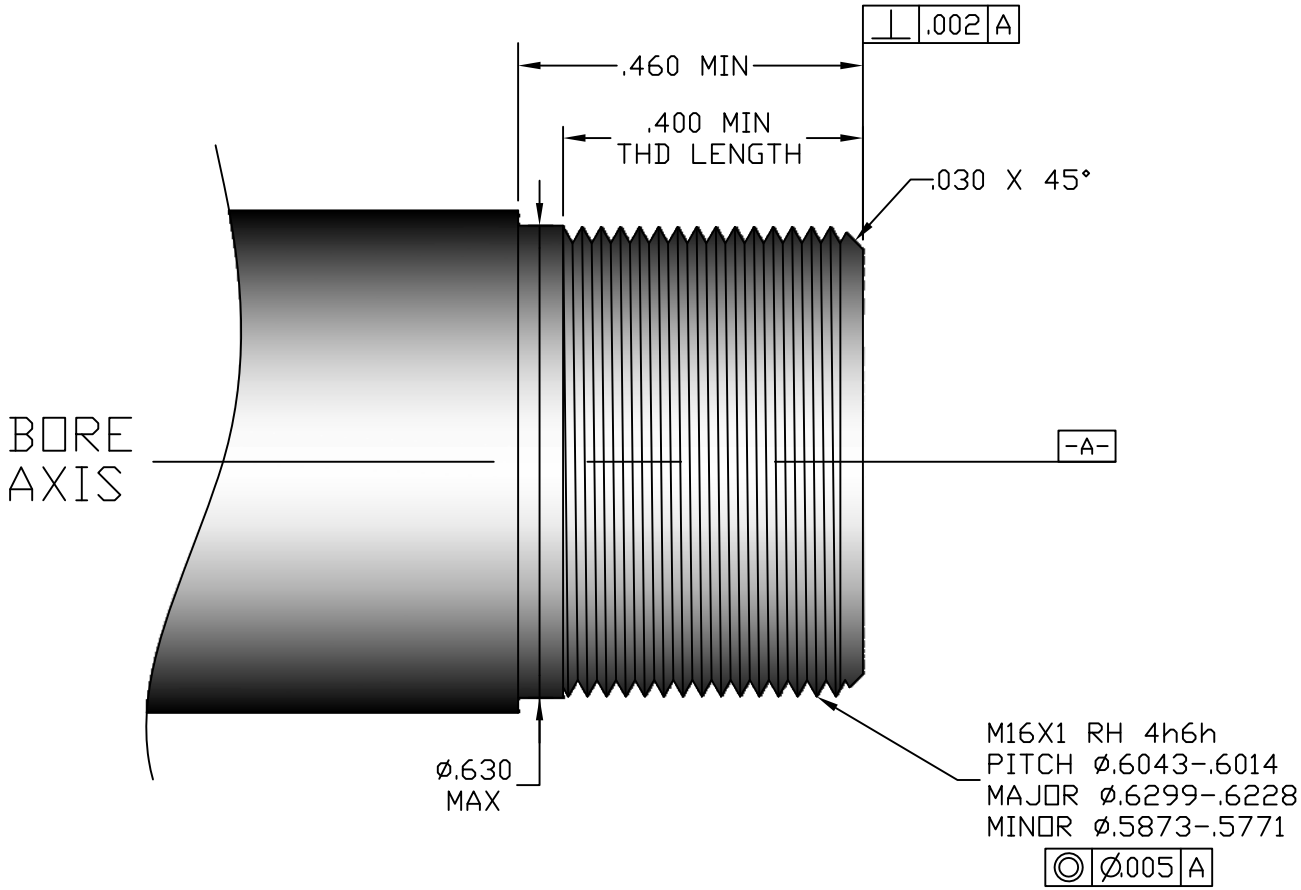

NOTES:
1) ALL DIMS CONCENTRIC WITHIN .003 T.I.R.

Yankee Hill Machine, Inc.

UNLESS OTHERWISE SPECIFIED	O\S REVISIONS			
	LET.	DATE	BY	APPD BY
B/E .005 MAX				
FIL R.015 MAX				
TOL ± 005				
SURF.FIN. 125				
ANGLES ± 2°				

DESCRIPTION
M16X1 RH 4h6h
COBRA M2,
UNIVERSAL THREAD
ADAPTER

STEP	OP	PART NUMBER
		THREAD SPEC

DRAWN BY	DATE	SHT. OF